Pressure transmitter for refrigeration and HVAC applications Model R-1

Applications

Refrigeration and HVAC applications
- Compressors
- Condensers
- Chillers

Special Features

- Stainless steel wetted parts
- Resistant against all common refrigerants
- Special design for the best possible condensation tightness
- Customised pin configuration possible

Fig. left: R-1 with M 12x1
Fig. center: R-1 with Metri Pack 150
Fig. right: R-1 with flying leads

Description

Refrigeration and HVAC applications
The R-1 pressure transmitter is optimally suited to the special requirements of refrigeration and HVAC applications. Its monolithic design eliminates the need for seals on the process connection. This qualifies the R-1 for use with all typical refrigerants (e.g. Freon and Ammonia).

Excellent performance
The hermetically welded, dry, thin-film measuring cell guarantees long-term leak tightness. In addition, the sputtered stainless steel measuring cell features high long-term stability, along with an especially high burst pressure.

Attractive price/performance ratio
Production on highly-flexible manufacturing lines ensures a very attractive price/performance ratio, also for high volumes.

Specifications		Model R-1					
Pressure ranges	bar	6	10	16	25	40	60
Over pressure safety	bar	20	20	32	50	80	100
Burst pressure	bar	100	100	160	250	400	400
	All pressure ranges also from -1 bar available.						
	{Vacuum, gauge pressure, compound ranges are available}						
Materials							
■ Wetted parts		Stainless steel					
■ Case		Stainless steel					
■ Electrical connection		Highly resistive, fibreglass- enforced plastic (PBT GF 30)					
		Signal output		Power supply UB		Maximum load RA	
		4 ... 20 mA, 2-wire		DC 7 ... 30 V		$R_A \leq (UB - 7\ V) / 0.02\ A$	
		1 ... 5 V, 3-wire		DC 8 ... 30 V		$R_A > 5$ kOhm	
		0 ... 10 V, 3-wire		DC 14 ... 30 V		$R_A > 10$ kOhm	
		0.5 ... 4.5 V, ratiometric		DC 5 ± 0.5 V		$R_A > 4.5$ kOhm	
Response time (10 ... 90 %)	ms	≤ 5					
Insulation voltage		DC 500 V					
Accuracy	% of span	≤ 2 *)					
	*) Including non-linearity, hysteresis, zero point and full scale error						
	(corresponds to error of measurement per IEC 61298-2).						
1-year stability	% of span	≤ 0.3 (at reference conditions)					
Permissible temperature of							
■ Medium		-40 ... +100 °C	-40 ... +212 °F				
■ Ambience		-25 ... +80 °C	-13 ... +176 °F				
■ Storage		-25 ... +80 °C	-13 ... +176 °F				
Rated temperature range		-25 ... +80 °C	-13 ... +176 °F				
Temperature coefficients within							
rated temperature range							
■ Mean TC of zero	% of span	typ. ≤ 0.5 / 10 K					
■ Mean TC of range	% of span	≤ 0.3 / 10 K					
CE-conformity							
■ EMC directive		2004/108/EC, EN 61 326 Emission (Group 1, Class B) and					
		Immunity (industrial locations)					
Wiring protection							
■ Short-circuit protection		S+ towards 0V					
■ Reverse polarity protection		UB towards 0V					
■ Overvoltage protection		DC 36 V					
Weight	kg	Approx. 0.08					

{ } Items in curved brackets are optional extras for additional price

Dimensions in mm

Example

Electrical connection
Flying leads

Pressure connection
7/16-20 UNF-2A
Cone 90°

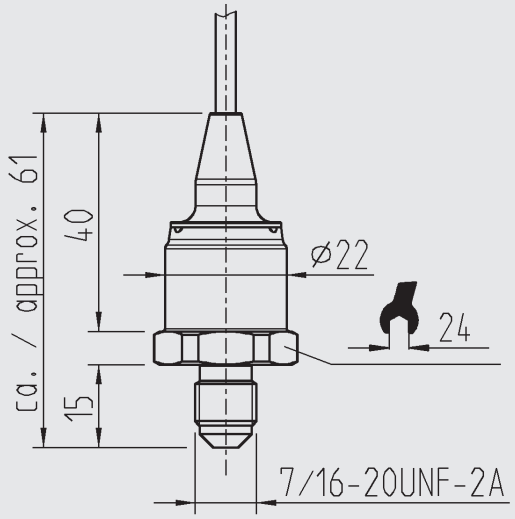

Electrical connections

Flying leads

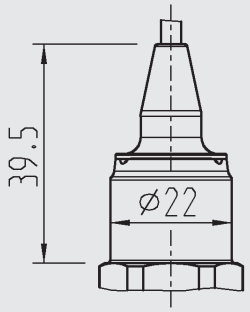

Circular connector
M 12x1

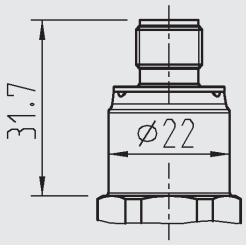

Connector
Metri Pack Series 150

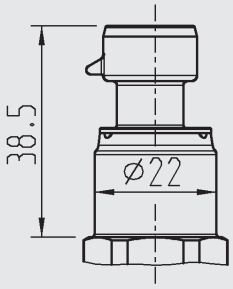

Pressure connections

7/16-20 UNF-2A
Cone 90°

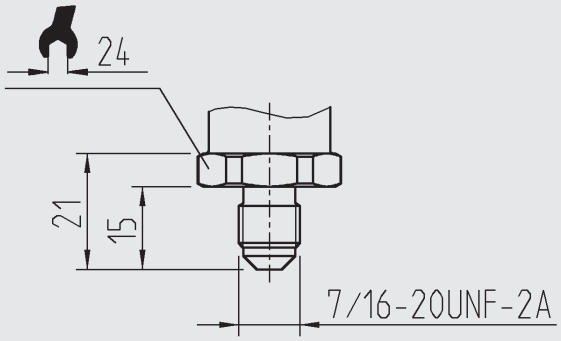

7/16-20 UNF-2B
Schrader internal thread

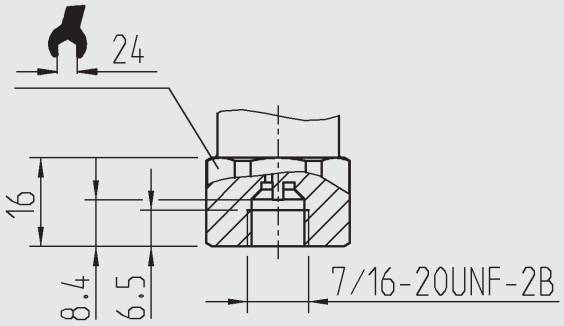

For installation and safety instructions see the operating instructions for this product.

For tapped holes and welding sockets please see Technical Information IN 00.14 for download at www.wika.de

Electrical connections

Wiring

	Circular connector M12x1, 4-pin			Connector Metri Pack Series 150, 3-pin			Flying leads, 1 m		
				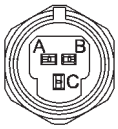					
2-wire	UB = 1	0V = 3		UB = B	0V = A		UB = brown	0V = green	
3-wire	UB = 1	0V = 3	S+ = 4	UB = B	0V = A	S+ = C	UB = brown	0V = green	S+ = white
Wire gauge							3 x 0.14 mm^2		
Cable diameter							3.2 mm		
Ingress Protection per IEC 60 529	IP 67			IP 67			IP 69K		
	The ingress protection classes specified only apply while the pressure transmitter is connected with female connectors that provide the corresponding ingress protection.								

other pin assignments on request

WIKA Alexander Wiegand SE & Co. KG
Alexander-Wiegand-Straße 30
63911 Klingenberg/Germany
Tel. (+49) 9372/132-0
Fax (+49) 9372/132-406
E-mail info@wika.de
www.wika.de

06/2010 GB